GSH-5L-00

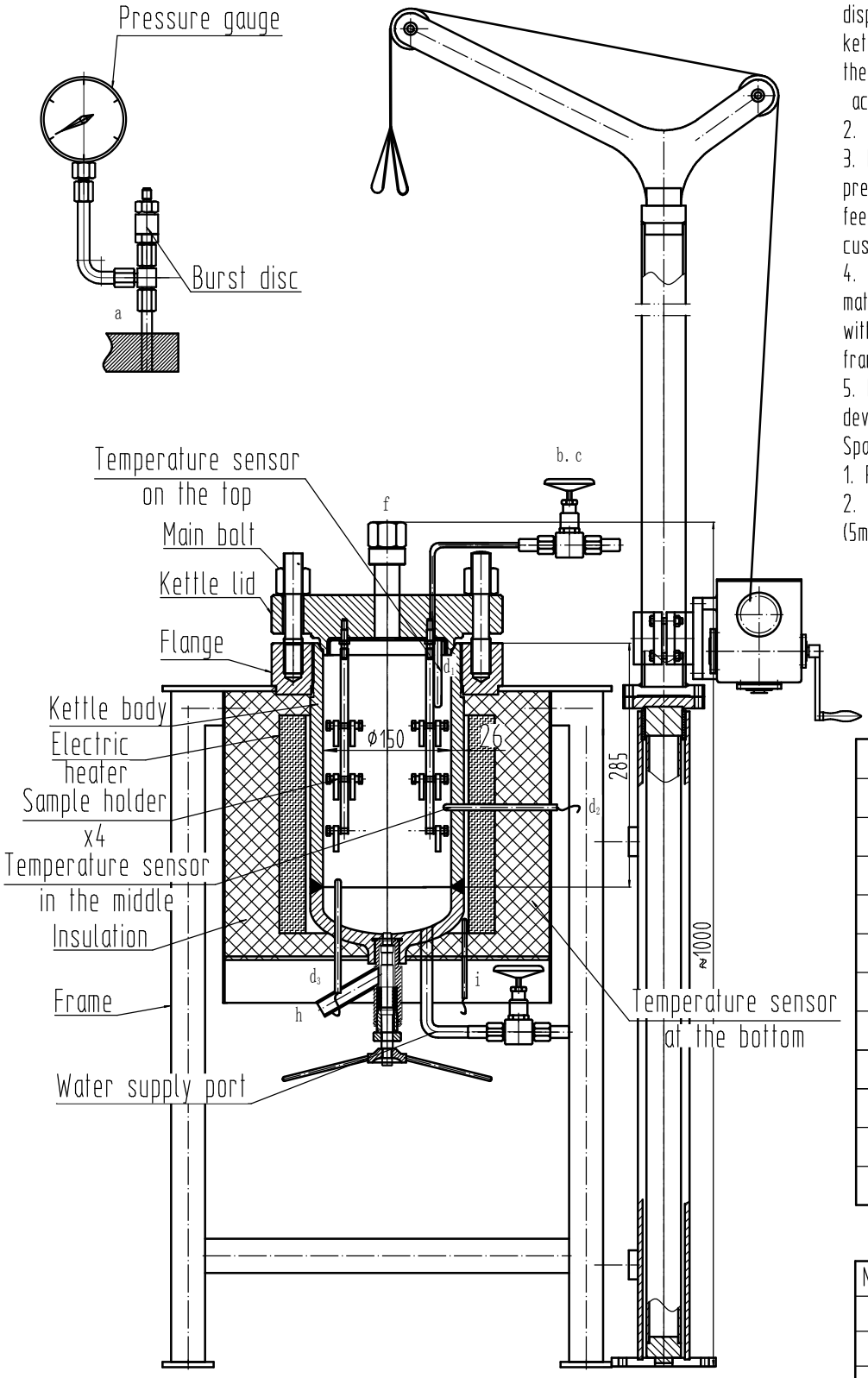

Equipment:

1. PID automatic adjustable controller(can display heating temperature- three in the kettle, one in the jacket, and can control the heating temperature, temperature control accuracy±1°);
2. Equip with electric heater.
3. Equip with kettle lid open valves, pressure gauge,bursting disc, ,plug on feeding port. The PT100 is provided by customer.
4. Material: Kettle body and all contacting materila is SS304, head and flange is Q345R with SS304 liner,insulation jacket is SS304, frame is carbon steel with coating.
5. Equip with insulation and manual lifting device, the kettle lid can be lifting.

Spare Parts:

1. Rupture disks of 20 pieces.
2. 2 pcs SS316L tubes, one is Diameter 1/8 (5m), one is 1/16 (5m).

Technical Parameter

1	Total Volume	L	5.7
2	Work Volume	L	5.0
3	Design Pressure	MPa	30
4	Design Temperature	℃	400
5	Work Pressure	MPa	25
6	Work Temperature	℃	350
7	Motor Power	W	/
8	Speed	R/M	/
9	Mixing Type	/	
10	Heating Power	kW	/
11	Heating Method	Electric heating	
12	Material	SS304	

Nozzle Table

No.	Nominal Size	Interface type	Usage
a	DN10		Pressure gauge Bursting disc
b	DN5	M14x1.5	Gas inlet port
c	DN5	M14x1.5	Vent port
d_{1-3}	DN5	screw	Kettle thermowell
f	DN25	screw plug	Feeding port
h	DN15	M30x1.5	Discharging port
i	DN10	M14x1.5	Jacket thermowell

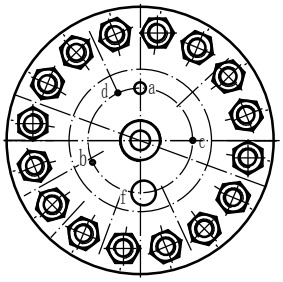

SS304	威海环宇化工机械有限公司 WEIHAI GLOBAL CHEMICAL MACHINERY MFG CO.,LTD.	
	CF-5L Reactor	
	HY/Y5.0-2006-1802	