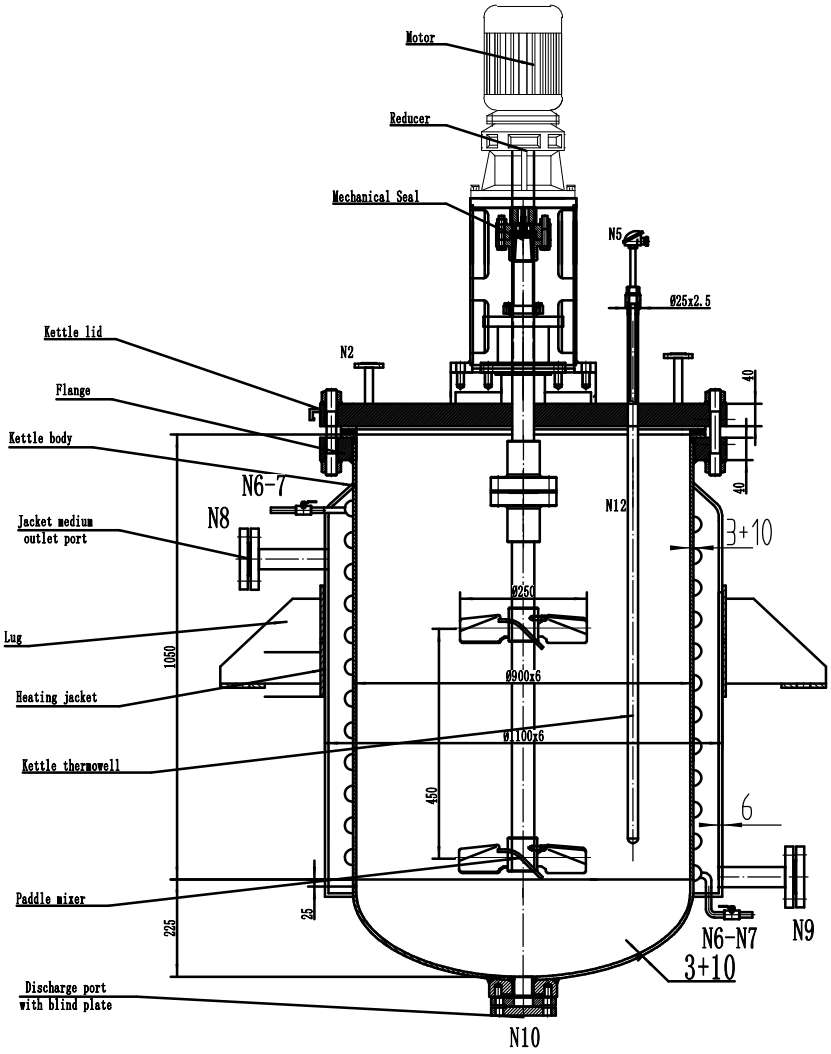

Technical Data for Design, Manufacture and Inspection

Standard	1、TSG R0004-2009 《Fixed Pressure Vessel Safe Technical Monitor Process》 2、GB 150.1~150.4-2011 《Pressure Vessel》					
Design Parameter				Vessel type		II grade
Parameter	Kettle	Jacket	Coil	Agitator	Type	Double paddles
Work Pressure MPa	ATM	ATM	0.2		Paddle diameter	Ø250
Design Pressure MPa	ATM	ATM	0.4		Seal type	Mechanical Seal
Work Temperature ℃	100	100	100		Speedir/min)	0-100
Design Temperature ℃	150	150	150	Motor	Art No.	YB160M-6
Max work pressure MPa	/				Power(kw)	4.0
Medium	/	Thermal oil	Cool water		Explosion-proof	/
Medium property	/	/	/			
Compression Material	TA1+Q345R	Q345R	SS304			
Crossion allowance mm	1.0	1.5	/		Nominal volume m³	0.5
Welded joint coefficient	1.0	0.85	/		Total volume m³	0.6
	/	/	/			/
Design Needs Life (year)	10 years under normal usage				Max weight kg	/

Manufacture and Inspection Request							
Welding process	As NB/T 47015-2011			Welding Material			
Rule	According to NB/T20553-2011 standard except marked in drawing.			Steel Type	Mel Wire	Welding wire / flux	
	fillet weld dimension as per thinner plate			Carbon steel	J506	H10Mn2/HJ431	
	Flange welding as per related flange standard			Stainless steel	A022	H03Cr19Ni12Mo2/HJ107	
	Rest as per GB/T 985-2008 standard			SS and Other Steel	A312	/	
Inspection JB/T4730.1-4	Type of welded joint			Inspection Rate	Image Meth.	Tech. Level	Appro. Level
	Kettle A、B grade			100%	RT	No less than II	No less than II
	Jacket A、B grade			At least 10% of seam	RT	No less than III	No less than III
	Jad tubing nation, shd tubbd joint of shd plate, tubbd joint of thinbitin steel			100%	PT	/	I grade
	Nominal Diameter<250 pipe and flange butt			100%	PT	/	I grade
	Nominal Diameter>250 pipe and flange butt			100%	RT	No less than II	No less than II
Test	Test	Kettle	Jacket	Coil	/		
	Hydrostatic Pressure MPa	0.6	ATM	/	Inner surface treatment request	remove dust	
	Leakage MPa	0.5	ATM	/	Coating/Transport/Package	As JB/T4711-2003	

Main compression material			
Name	Material	Material standard	
Kettle	SS304	Cladding Plate: NB/T4708.1-2008, Basic Layer: GB713-2008,Cladding Layer: GB3911-2009	/
Jacket	Q345R	GB713-2008	Not roll
Flange	16Mn	NB/T 47008-2010	/

Mixing Request

1. After agitator assembly, manual turning, no stuck.
2. After assembly completed, liquid water instead of mechanical the position of 200mm from circular seam, test rotation under designed pressure, testing should be more than 4 hours, no noise and vibration, after testing approved, blow water inside kettle immediately.
3. The rotation direction of agitator shaft should be in accordance with the drawing, not in converse direction.
4. After agitator assembly, should do dynamic balance test. Balance accuracy G2.5 grade.

Other Request

1. The equipment used plate conforms to NB/T47002.1-2009 standard 2 grade, ultrasonic test for each stainless steel plate as JB/T4730-2005 standard Ⅲ grade.
The SS304 plate on cladding layer conforms to GB2451H-2009 standard. The 16Mn forgin parts conforms to NB/T47008-2010 Ⅱ grade.
2. During test and operation, the chloridion content in water should not exceed 25mG/L in the equipment. After hydraulic test, clean the inside kettle.
3. Basic min thickness of kettle>design thickness (include corrosion allowance)6mm.
Jacket head min thickness>design thickness (include corrosion allowance)6mm.
4. Shot peening and removing rust on surface carbon steel, then coat epoxy zinc rich primer twice, gray painting twice.
Special Notice:When change usage condition of the equipment,should get approved from original design company.

Nozzle Table

No.	Nominal Size	Mlange Standard and Pressure Level	Seal Type	Usage and Name
N1	25 (B)	HG/T20592-2009 PL PN10	RF	Liquid feeding port
N2	25 (B)	HG/T20592-2009 PL PN10	RF	Gas inlet port
N3	25 (B)	HG/T20592-2009 PL PN10	RF	Liquid port
N4	25 (B)	HG/T20592-2009 PL PN10	RF	Vent port
N5	20	M27*12	screw	PT100 kettle thermowell
N6-7	20 (B)	HG/T20592-2009 PL PN10	RF	Cooling water inlet/outlet
N8	25 (B)	HG/T20592-2009 PL PN6	RF	Jacket medium outlet port
N9	25 (B)	HG/T20592-2009 PL PN6	RF	Jacket medium inlet port
N17	80 (B)	HG/T20592-2009 PL PN10	RF	Bottom discharge port

Equipment:

1. PID automatic controller, can display mixing speed and temperature, can control mixing speed (frequency control) and heat temperature, temperature control accuracy is ±1° C.
2. Equip with mechanical seal coupler, with motor, reducer and invertor.
3. Equip with PT100 temperature sensor, equip flanges on all kettle open ports, also with gaskets, wrench, standard component.
4. Material: Kettle head, kettle body and all contacting material inside kettle isTA1+Q345R, heating jacket is Q345R, flange is 16Mn,

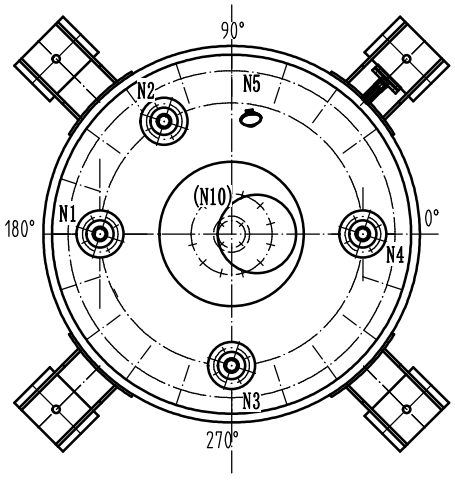

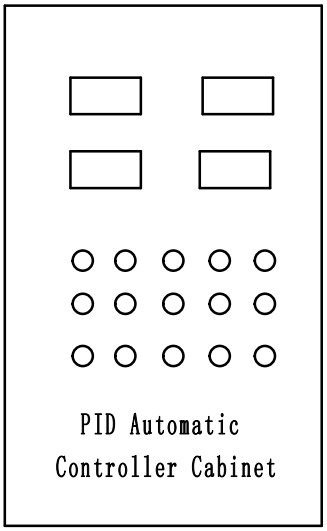

威海环宇化工机械有限公司 WEIHAI GLOBAL CHEMICAL MACHINERY MFG CO.,LTD			TA1+Q345R
	GSH-800L Mechanical Seal Reactor		HY19-GSH800L-0814S